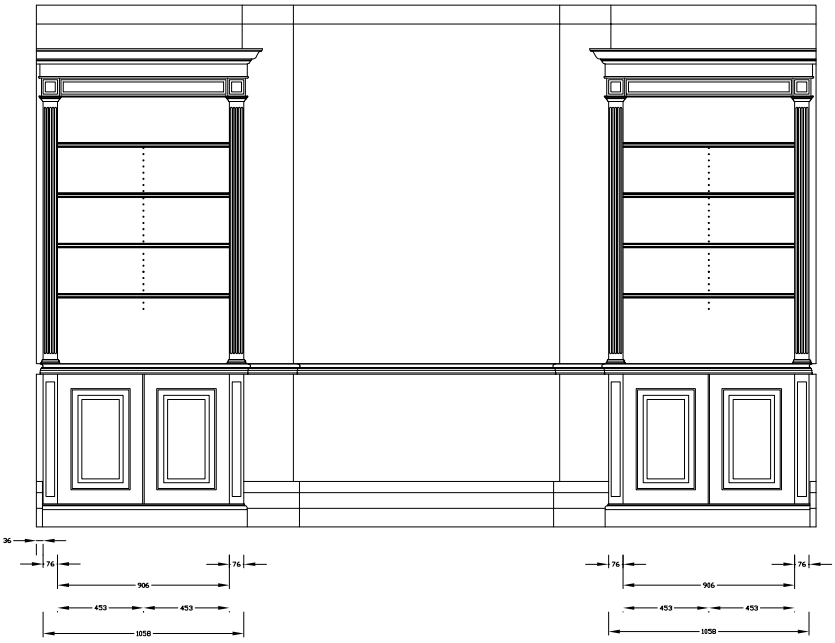

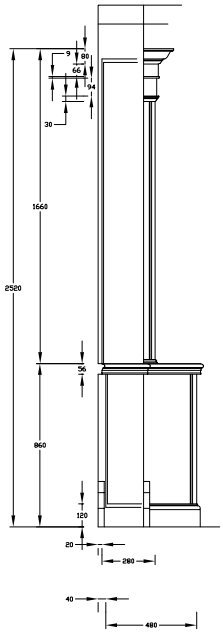

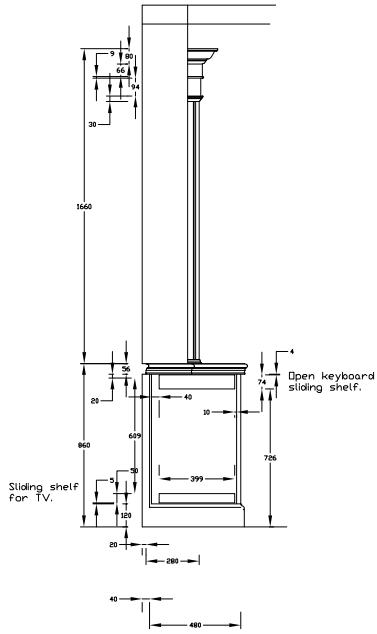

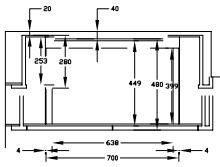

Open keyboard sliding shelf at about 700 oa wide 56mm clear height 400mm deep and about 720mm above floor.

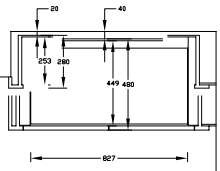

TV sliding shelf at about 820 oa wide clear 56mm clear height from pot board 400mm deep and about 600mm clear ht below cupboard top.